ENGINE

REMARKS

This manual covers the 4D56 engines of 1994 and subsequent year models. When using this manual, please note that all the pages are applicable to the above engines regardless of the indication in the

GENERAL INFORMATION

ENGINE SECTIONAL VIEW

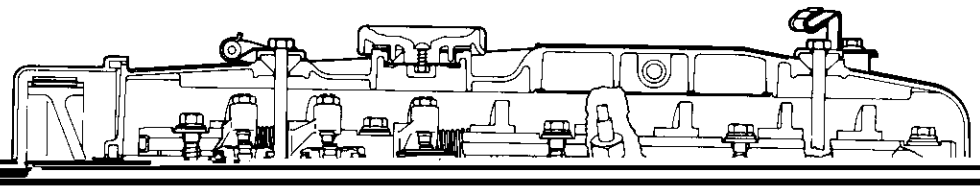

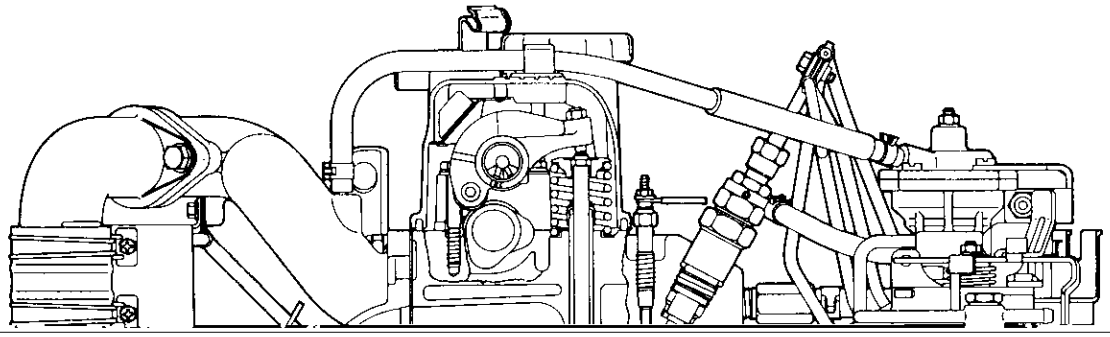

LUBRICATION SYSTEM

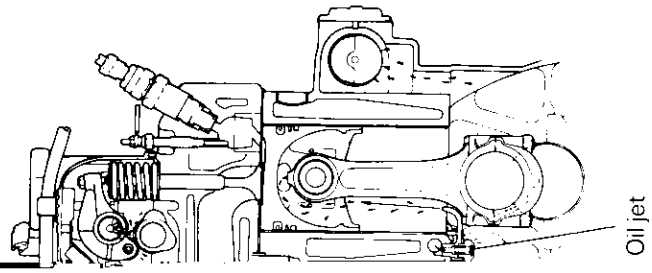

LIST OF MAJOR CHANGES

	Description of change	Applicable Engine Model	Effective Date
①	Oil pump has been changed from gear type to trochoid type.	All	From Sep. 1990

© Mitsubishi Motors Corporation Dec. 1990 PWEE9067

1. SPECIFICATIONS

GENERAL SPECIFICATIONS

Description		Specifications
Type		Diesel engine
No. and arrangement of cylinders		4 in-line, longitudinal
Combustion chamber		Swirl chamber
Total displacement		2,477 cc (151.2 cu.in.)
Cylinder bore x stroke		91.1 x 95 mm (3.59 x 3.74 in.)
Valve mechanism		Single overhead camshaft
Rocker arm		Roller follower type
Compression ratio		21
Valve timing		
Intake valve	Open	20° BTDC
	Close	49° ABDC
Exhaust valve	Open	55° BBDC
	Close	22° ATDC

SERVICE SPECIFICATIONS

mm (in.)

	Standard	Limit
Cylinder head		
Flatness of gasket surface	0.05 (0.002)	*0.2 (0.008)
* Grinding is not suitable for correction.		
Flatness of manifold mounting surface	0.15 (0.0059)	0.3 (0.012)
Overall height	94.0 – 94.1 (3.701 – 3.705)	
Oversize rework dimensions of valve guide hole		

mm (in.)

	Standard	Limit
Oil pump (Involute gear type)		
Tip clearance		
Inner gear	0.22 – 0.35 (0.0087 – 0.0138)	
Outer gear	0.12 – 0.22 (0.0047 – 0.0087)	
Side clearance	0.04 – 0.10 (0.0016 – 0.0039)	
Body clearance		
Outer gear	0.12 – 0.18 (0.0047 – 0.0071)	
Inner gear	0.03 – 0.09 (0.0012 – 0.0035)	
Oil pump (Trochoid type)		
Tip clearance	0.11 – 0.24 (0.0043 – 0.0094)	
Side clearance	0.04 – 0.10 (0.0016 – 0.0039)	
Body clearance		
Outer rotor	0.10 – 0.18 (0.0039 – 0.0071)	0.35 (0.0138)
Inner rotor	0.03 – 0.09 (0.012 – 0.035)	
Drive belt		
Deflection	10 – 13 (0.39 – 0.51)	

TORQUE SPECIFICATIONS

	Torque		
	Nm	kgm	ft.lbs.
Front case, silent shaft and oil pan			
Oil filter bracket bolt	14	1.4	10
Oil drain plug	40	4.0	29
Oil lever sensor bolt	9	0.9	7
Oil pan bolt	7	0.7	5
Oil screen bolt	19	1.9	14
Front upper case bolt	14	1.4	10
Plug	24	2.4	17
Right silent shaft flange bolt	37	3.7	27
Front lower case			
M8 x 25, M8 x 65	13	1.3	9
M8 x 75 (Alternator brace bolt), M8 x 90	24	2.4	17
Check valve	33	3.3	24
Oil cooler by-pass valve	55	5.5	40
Oil pressure switch	10	1.0	7

NOTES

2. SPECIAL TOOLS

Tool	Number	Name	Use
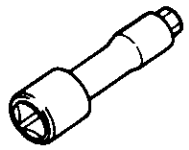	MD998051	Cylinder head bolt wrench	Loosening and tightening of cylinder head bolts
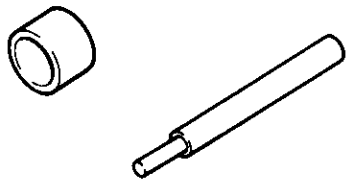	MD998115	Valve guide installer	Removal and installation of valve guide
	MD998148	Valve seat cutter pilot	Correction of [illegible]

Tool	Number	Name	Use
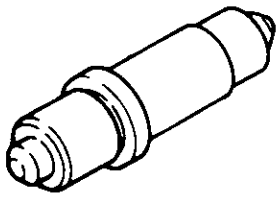	MD998386	Connecting-rod small-end bushing replacement tool	Replacement of connecting-rod small-end bushing
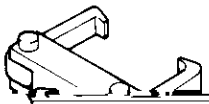	MD998388	Injection pump sprocket puller	Removal of injection pump sprocket

NOTES

3. DRIVE BELT AND TIMING BELT

REMOVAL AND INSTALLATION

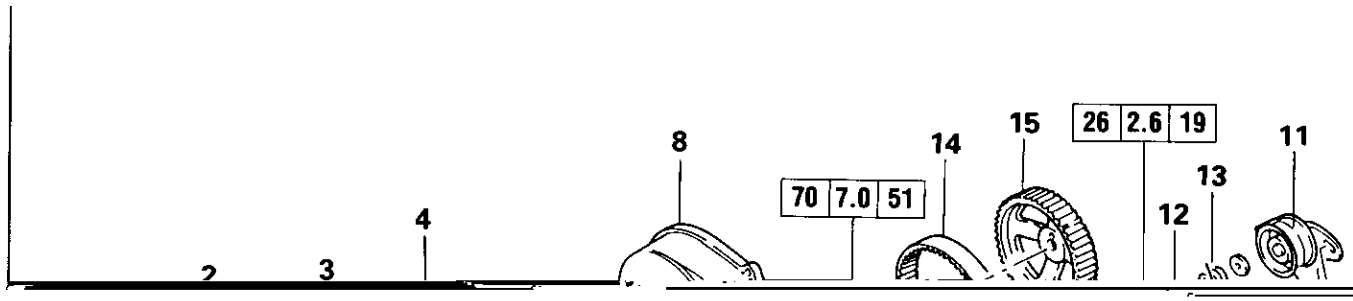

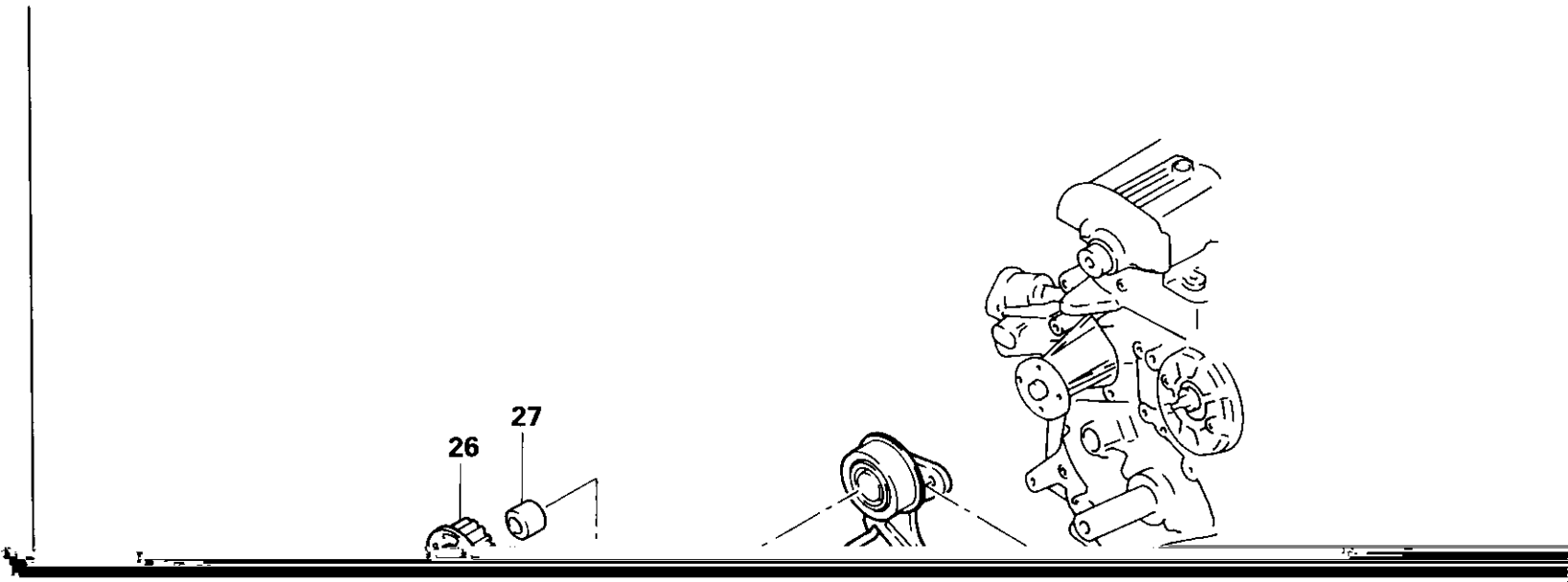
26
27

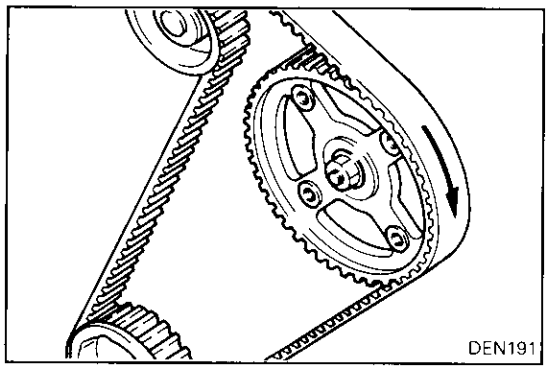

SERVICE POINTS OF REMOVAL

◊A◊ REMOVAL OF TIMING BELT

(1) Using chalk, etc., mark an arrow on the back of the timing belt to indicate the direction of rotation. This is to ensure correct installation of the belt in case it is reused.

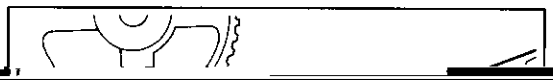

(2) Push the timing belt tensioner toward the water pump and temporarily tighten the tensioner mounting bolt so that the

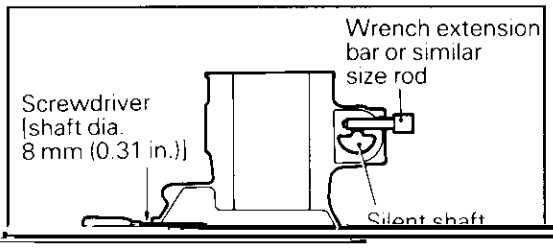

⟨D⟩ REMOVAL OF SILENT SHAFT SPROCKET RIGHT / LEFT

(1) When loosening the nut and bolt for two silent shaft sprockets, be sure to lock the silent shaft as shown.

(6) Abnormal wear on side

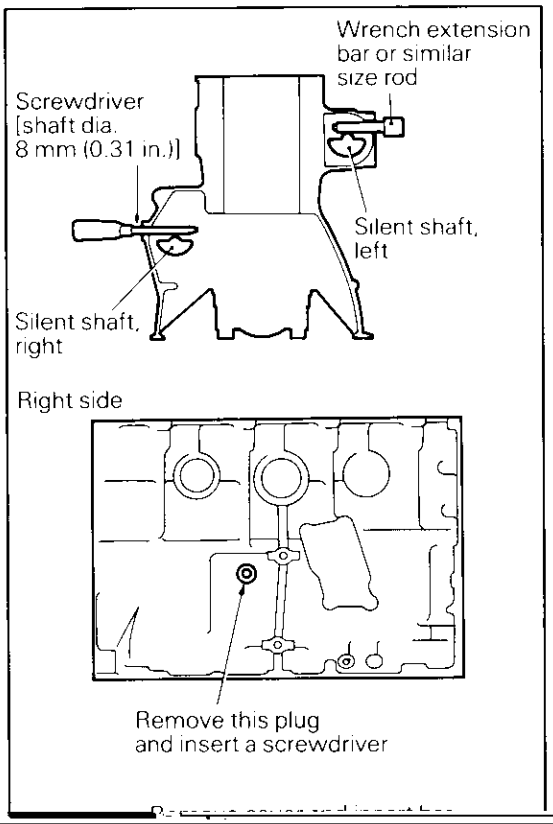

◆C◆ INSTALLATION OF SILENT SHAFT SPROCKET, RIGHT / SILENT SHAFT SPROCKET, LEFT

(1) When tightening the nut and bolt for two silent shaft sprockets, be sure to lock the silent shaft as shown.

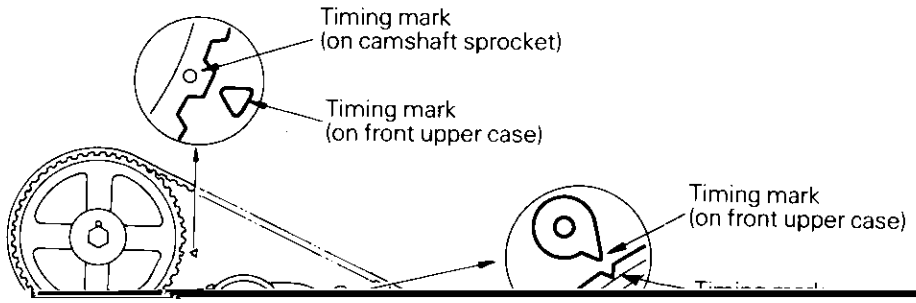
Timing mark
(on camshaft sprocket)
Timing mark
(on front upper case)
Timing mark
(on front upper case)

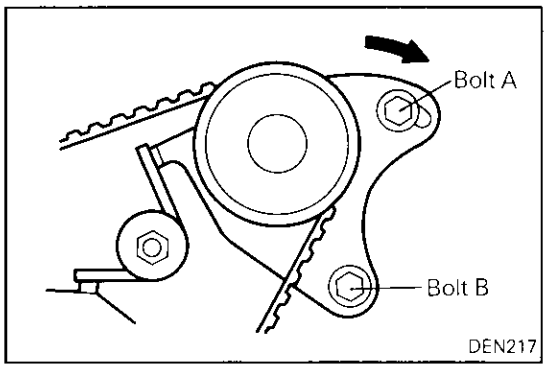

(7) Back off tensioner bolt "A", that have previously been secured to the water pump side, one to two turns to give tension to the belt using tensioner spring tension.

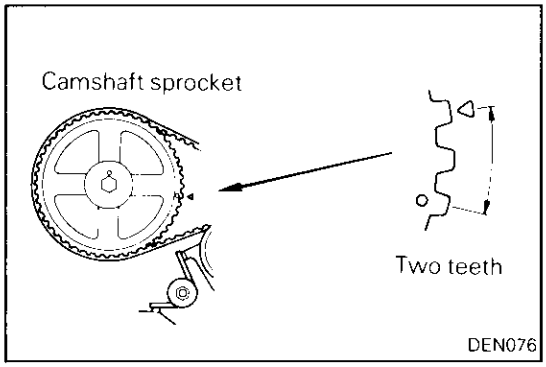

(8) Confirm that the timing belt is correctly engaged with three sprockets.
(9) Turn crankshaft clockwise by the two teeth of the camshaft sprocket and keep the position.

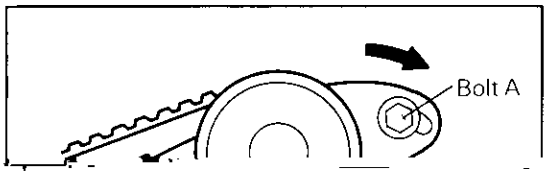

(10)Tighten the bolt "A".
(11)Tighten the bolt "B".

NOTE
If the bolt "B" is tightened first, the tensioner should be turned together, causing an undue tension to be applied to

NOTES

4 INTAKE AND EXHAUST MANIFOLDS

INTAKE AND EXHAUST MANIFOLDS

REMOVAL AND INSTALLATION

<Engine with turbocharger>

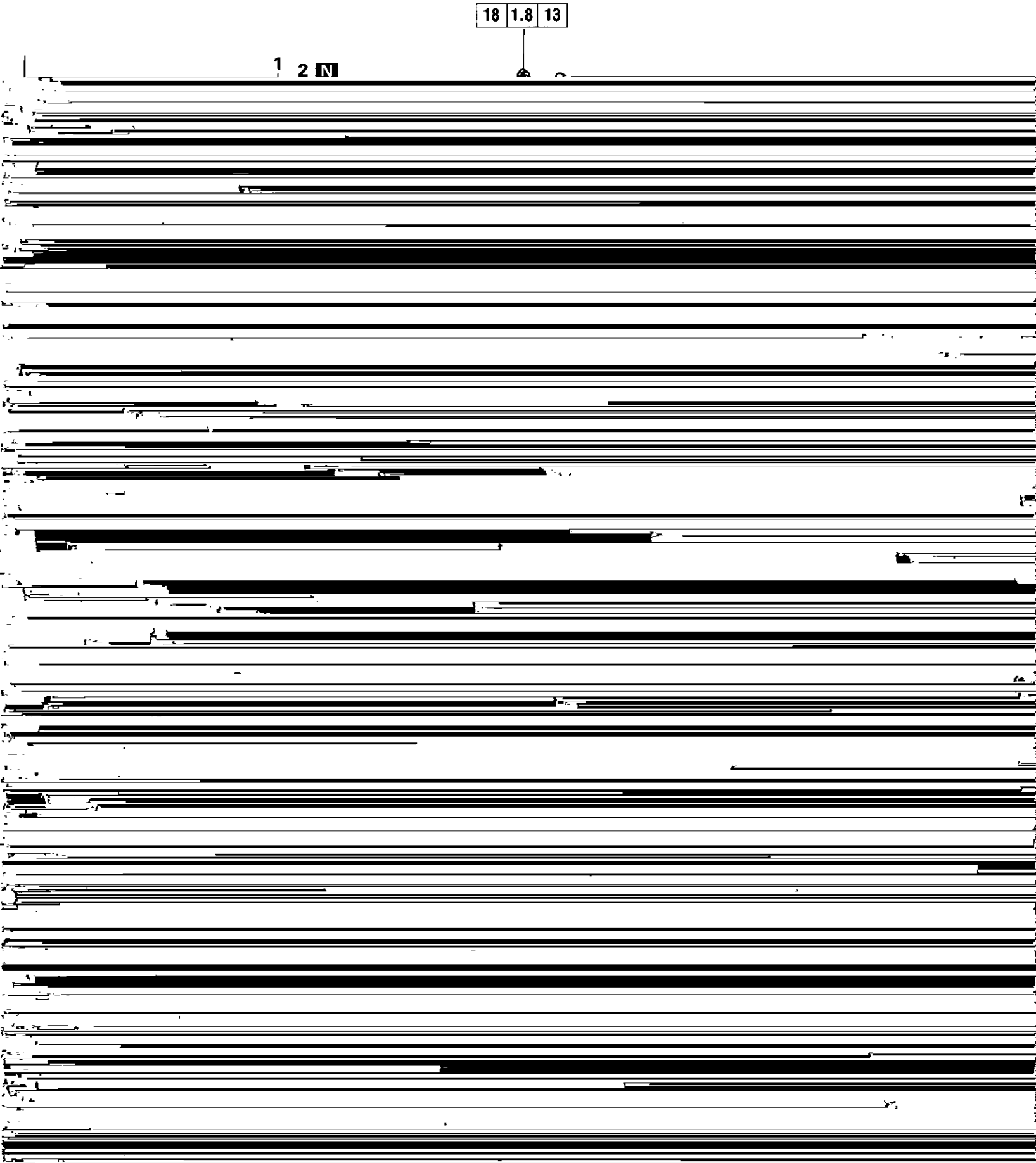

SERVICE POINT OF INSTALLATION

◆A◆ EYEBOLT

(1) Before installing the oil pipe eyebolt (at top of the turbocharger), fill the turbocharger with clean engine oil.

© Mitsubishi Motors Corporation Dec. 1990

NOTES

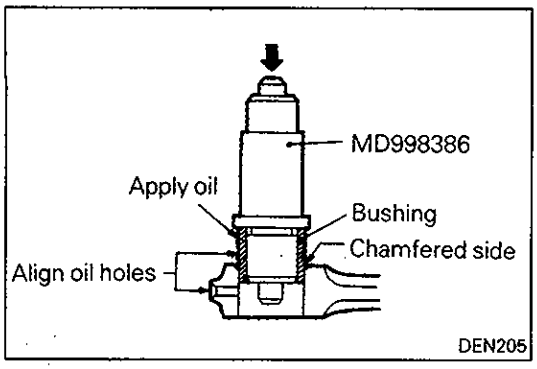

(2) Using the special tool, press-fit the bushing into position. At the time, make sure that the oil hole in the bushing is aligned with that in the connecting rod small end.

(3) Machine the bushing I.D. to the standard value

(4) Use suitable thread protectors on connecting rod bolts before inserting piston and connecting rod assembly into

NOTES

11. CRANKSHAFT, FLYWHEEL AND DRIVE PLATE

REMOVAL AND INSTALLATION

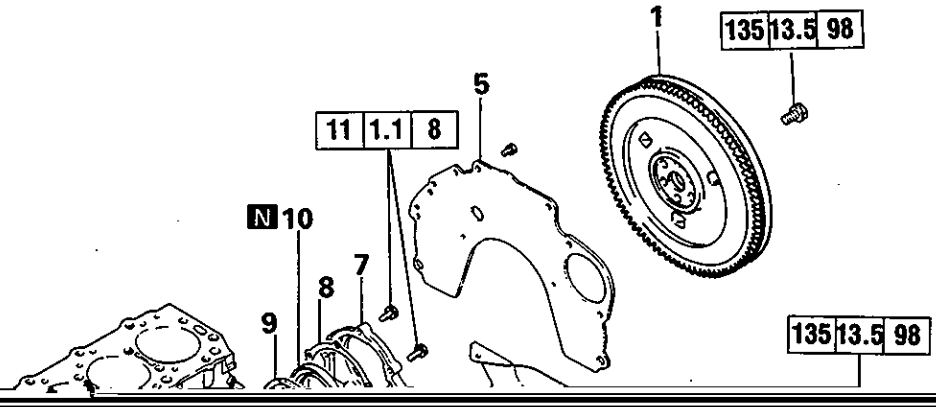

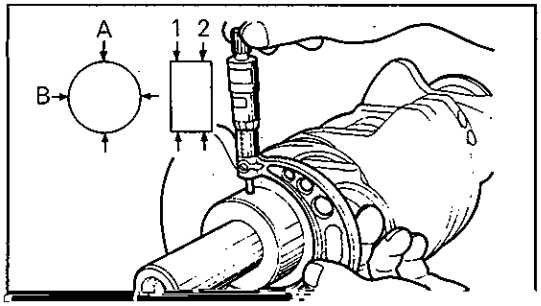

INSPECTION

CRANKSHAFT

(1) Measure the outside diameter of journal and inside diameter of crankshaft bearing. If the difference between them (oil clearance) exceeds the limit, replace the crankshaft bearing and, if necessary, crankshaft.
When the crankshaft is to be reused by machining to undersize, the crankshaft bearings should be changed to

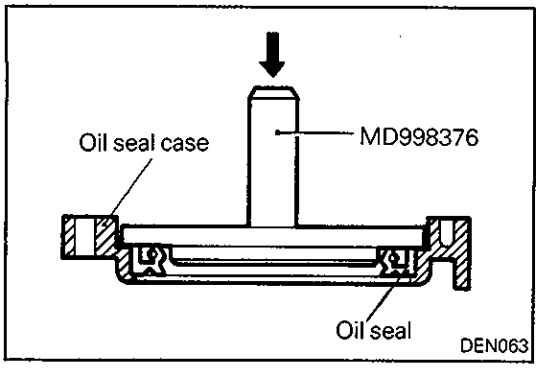

◆D◆ INSTALLATION OF OIL SEAL

◆E◆ INSTALLATION OF OIL SEPARATOR

(1) Push the oil separator into the oil seal case, with its oil hole at the case bottom (indicated by an arrow in illustration).